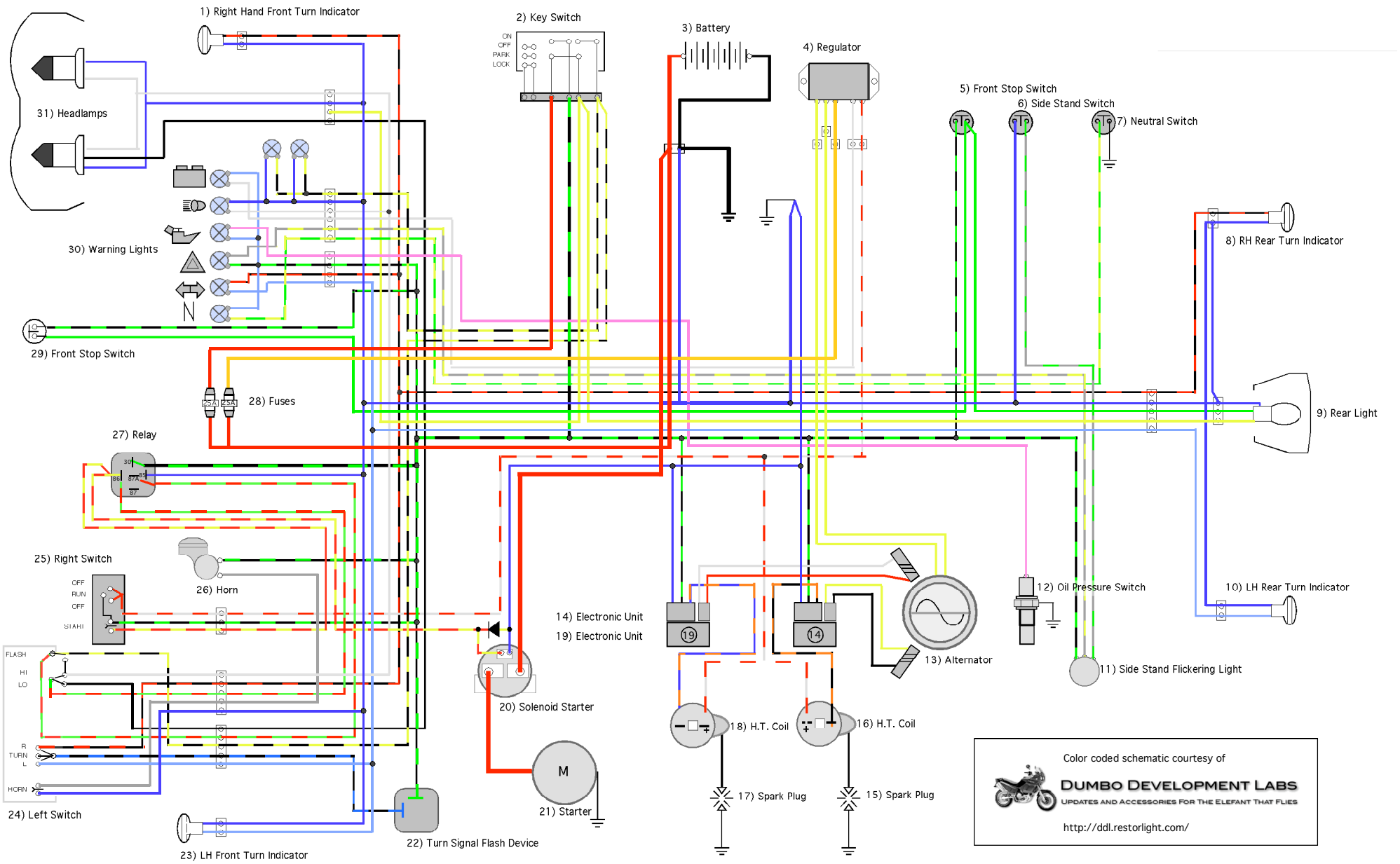Ducati E900 / Cagiva Elefant Wiring Diagram. Data Source : 1994 - 1995 USA Owners Manual